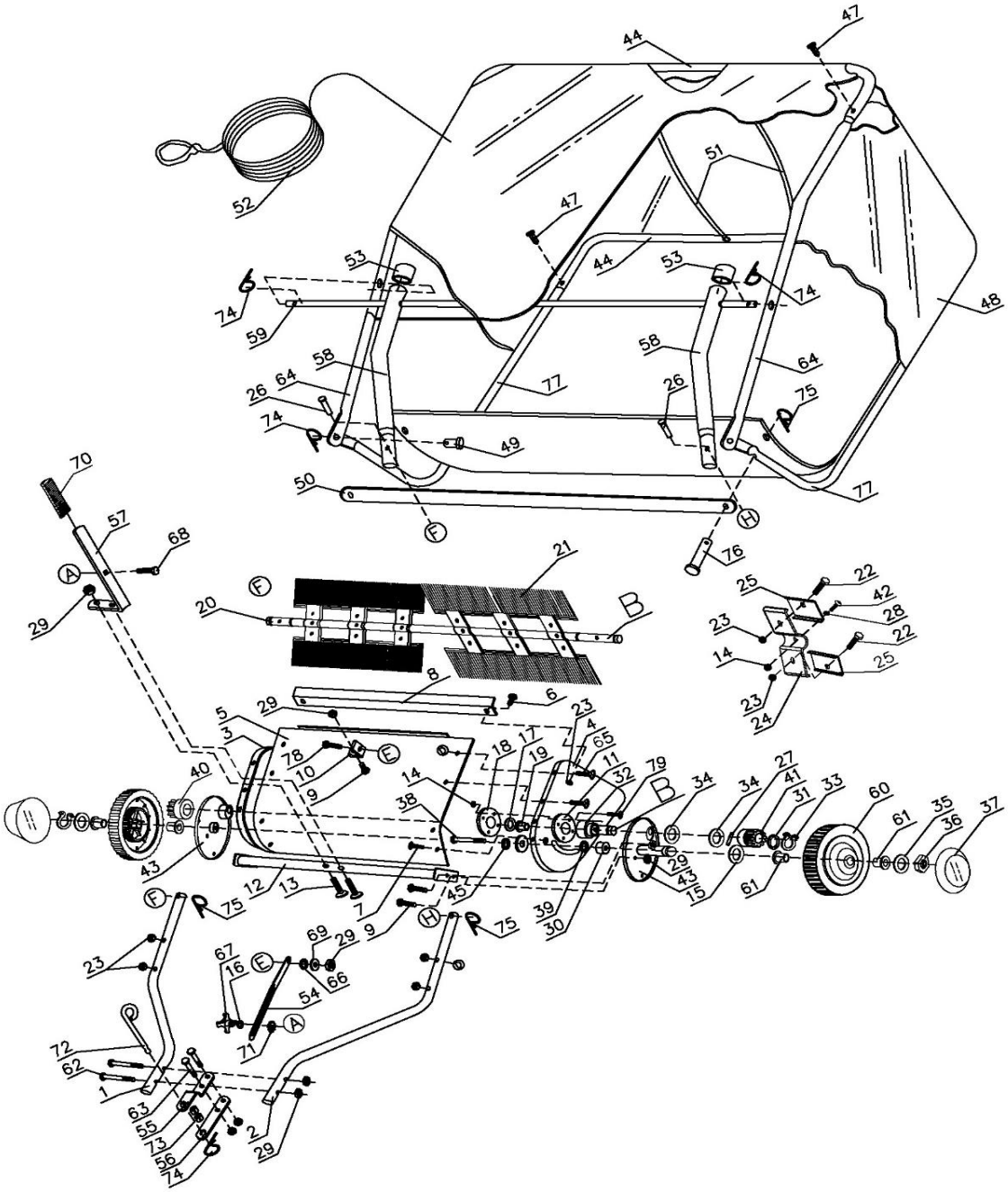

Ref#	Numer katalogowy	Description	Qty
1	SP31109-1	Hitch Tube, Right Side	1
2	SP31109-2	Hitch Tube, Left Side	1
3	SP31109-3	End plate, Right Side	1
4	SP31109-4	End plate, Left Side	1
5	SP31109-5	Wrapper	1
6	SP31109-6	Hex Bolt, M6×12	2
7	SP31109-7	Hex Bolt, M5×12	6
8	SP31109-8	Connecting Rod	1
9	SP31109-9	Hex Bolt, M8×16	5
10	SP31109-10	Angle Bracket	1
11	SP31109-11	Special Washer	1
12	SP31109-12	Height Adjustment Tube Assy	1

13	SP31109-13	Hex Bolt, M8×40	2
14	SP31109-14	Nylon Lock Nut, M5	20
15	SP31109-15	Adj. Washer C	2
16	SP31109-16	Big Flat Washer	1
17	SP31109-17	Inside Star Washer	1
18	SP31109-18	Dust Cover Retainer	1
19	SP31109-19	Brush Shaft Bushing	1
20	SP31109-20	Brush Shaft	1
21	SP31109-21	Brush	4
22	SP31109-22	Hex Bolt,M6×20	16
23	SP31109-23	Nylon Lock Nut,M6	30
24	SP31109-24	Retainer, Brush (Double)	6
25	SP31109-25	Retainer, Brush (Single)	12
26	SP31109-26	Clevis Pin E	2
27	SP31109-27	Dowel Pin (Drive)	2
28	SP31109-28	Mounting Lock Washer, Ø5	6
29	SP31109-29	Nylon Lock Nut,M8	12
30	SP31109-30	Spacer for Axle	2
31	SP31109-31	Adj. Washer B	2
32	SP31109-32	Bushing	2
33	SP31109-33	Retaining Ring,Ø15	2
34	SP31109-34	Adj. Washer A	4
35	SP31109-35	Big Flat Washer, Ø10	4
36	SP31109-36	Nylon Lock Nut,M10	2
37	SP31109-37	Hub Cap	2
38	SP31109-38	Hex Bolt,M10×85	2
39	SP31109-39	Spacer Bushing Ø16×3.5	2
40	SP31105-23	Pinion Gear R.H.	1
41	SP31105-57	Pinion Gear L.H.	1
42	SP31109-42	Hex Bolt M5x25	6
43	SP31109-43	Dust Cover Assy	2
44	SP31109-44	Hopper Frame Tube (Rear)	2
45	SP31109-45	Lock Washer Ø10	2
47	SP31109-47	Plastic Plug	4
48	SP31109-48	Hopper Bag	1
49	SP31109-49	Clevis Pin C	2
50	SP31109-50	Bag Frame Strap	1
51	SP31109-51	Hopper Support Rod	2
52	SP31109-52	Hopper Rope	1
53	SP31109-53	Vinyl Cap	2
54	SP31109-54	Height Adjustment Strap	1
55	SP31109-55	Hitch Bracket	1
56	SP31109-56	Hitch Bracket(Straight)	1
57	SP31109-57	Height Adjustment Handle	1
58	SP31109-58	Bag Arm Tube	2
59	SP31109-59	Front Support Rod	1
60	SP31109-60	Wheel & Tire Assy. (with bearing)	2

61	SP31105-61	Wheel Bushing	4
62	SP31109-62	Hex Bolt,M8×75	2
63	SP31109-63	Hex Bolt,M10×85	2
64	SP31109-64	Upper Hopper Frame Tube	2
65	SP31109-65	Hex Bolt,M6x45	4
66	SP31109-66	Spacer Bushing Adjusting Height	1
67	SP31109-67	Knob, Plastic	1
68	SP31109-68	Carriage Bolt,M8×30	1
69	SP31109-69	Big Flat Washer,Ø8	1
70	SP31109-70	Handle Grip	1
71	SP31109-71	External Teeth Washer	6
72	SP31109-72	Hitch Pin	1
73	SP31109-73	Snap-Ring Bearing	2
74	SP31109-74	R Pin Ø3	5
75	SP31109-75	R Pin Ø2	4
76	SP31109-76	Clevis Pin B	4
77	SP31109-77	Lower Hopper Frame Tube	2
78	SP31109-78	Hex Bolt M8x20	1
79	SP31109-79	Screw M5x16	8

